HAND PALLET TRUCK SCALES

RAVAS-2100 EXi

Explosion proof pallet truck scale

BENEFITS

- Certified ATEX II 2 G EEx ia IIB T4
- Pivoting indicator
- Big push buttons
- Exchangeable battery pack
- Stainless steel forks
- Antistatic wheels
- For mixing and batching in zone 1/21

Top quality

For hazardous areas

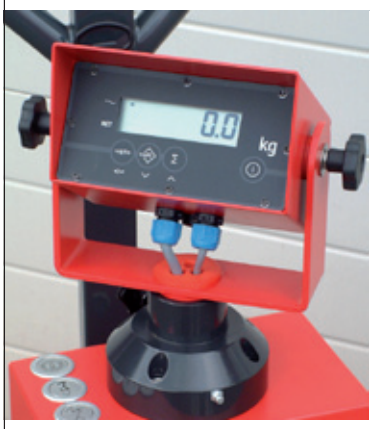

RAVAS

RAVAS-2100 EXi

FUNCTIONS

- Automatic and manual zero correction
- Gross/net weighing
- Automatic and manual tare up to 200 kg
- Totalling with sequence number
- Error messages in display
- Automatic switch-off after 30 minutes of non-use
- Low battery indication 5 hours before battery is empty

STANDARD SPECIFICATIONS

Weighing capacity	2,200 kg
Graduation	multirange: 0 - 200 kg: graduation 0.2 kg 200 - 500 kg: graduation 0.5 kg 500 - 2,200 kg: graduation 1 kg
Max. tolerance	0.1% of the applied weight
Protection class	II 2 G EEx ia IIB T4, approval number KEMA 03ATEX1096
Display	pivoting and tilting, LCD, height 18 mm
Keypad	foil keypad and push buttons, 3 function keys, on/off key, easy to clean, resistant to chemicals
Protection class	load cells and cabling IP67, indicator IP65
Fork shoes	stainless steel
Battery	intrinsically safe, approval number KEMA 02ATEX2343 BU-2100-Exi, 8Vdc/3.5 Ah, rechargeable, exchangeable, maintenance free
Battery life	100 hours, low battery indication 5 hours before automatic switch-off
Charger	230V/8Vdc - 1 A; for use outside hazardous zone
Charging time	approximately 8 hours
Steering wheels	rubber, antistatic
Loading wheels	polyurethane, single
Colour	red (RAL 3000), epoxy painted
Own weight	130 kg
Pump	quick lift

DIMENSIONS IN MM

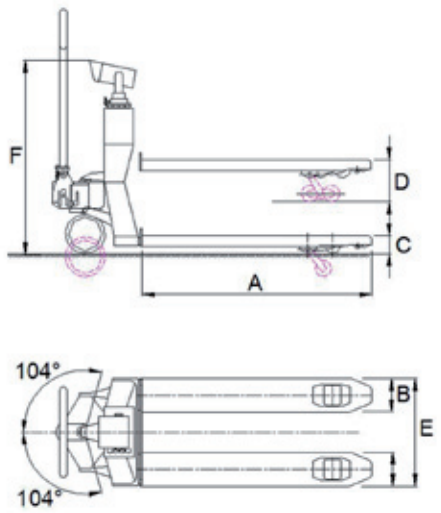

A	Fork length	1150
B	Fork width	170
C	Minimum fork height	85
	Space underneath fork	22
D	Maximum fork height	205
	Lifting height	120
E	Width over forks	540
F	Height to top indicator	995

For approved versions, class OIML III: European approval no. T2782, switch-off of display when tilting more than 2°.
Graduation: multirange 0.2/0.5/1 kg, or one of the following fixed graduations:

- 1,000 divisions : 1.0/1,000 kg or 2.0/2,000 kg
- 2,000 divisions : 0.5/1,000 kg or 1.0/2,000 kg
- 3,000 divisions : 0.1/300 kg or 0.2/600 kg or 0.5/1,500 kg

ISO 9001:2008 ISO 14001:2004

TS LFTRAVAS-2100 EXi EN EU rev.11.03.25 Changes reserved

PREMIUM OPTIONS*

- **Extra exchangeable battery pack**
- **Integrated Bluetooth feature for data transfer to PDA**
- **Legal for trade version, OIML III**
- **Full stainless steel truck**

OPTIONS*

- Multirange graduation 0.1/0.2/0.5 kg
- Footbrake
- Fork lengths: 950 - 2,500 mm
- Width over forks 700 mm
- Capacity 3,000 kg (graduation 1 kg)

* The use of options may change related specifications.

RAVAS Europe B.V.
P.O. Box 2023, NL-5300 CA Zaltbommel, The Netherlands
T. +31 (0)418 51 52 20, F. +31 (0)418-51 53 20
backoffice@ravas.com, www.ravas.com

RAVAS